DESIGN AND FABRICATION OF AN ATOMIC LAYER DEPOSITION REACTOR

Jason Cao **Hayden Groeschel** **Tyler Liao** **Cameron Lowe**

ABSTRACT

Materials science for tritium containment is a critical part of developing low-cost clean energy using nuclear fusion reactors. This report details the design, fabrication, and testing of a custom atomic layer deposition reactor (ALD) system developed for Dr. Zachary Robinson at the Laboratory for Laser Energetics for material science research. The new ALD system enables simultaneous sample growths with the ability to interact with sample mid-run, significantly reducing processing time. The system consists of a polycarbonate glovebox and a stainless steel reaction chamber. Design selection was done using a Pugh matrix, with the final glovebox design featuring a fully removable enclosure secured by draw latches, and the final reactor design using a set of guiding fixtures. Mechanical analyses including tolerance, fatigue, torque, and materials were performed to validate the integrity of the design. Physical testing confirmed that the system passed the helium leak check 4.7E-10 torr L/sec which was lower than the specified 1E-9 torr L/sec. Full thermal validation has yet to be performed. The total material cost of the system was $881 and took approximately 150 hours to design and fabricate.

PROBLEM DEFINITION

One of the major challenges in developing a nuclear fusion power plant is dealing with tritium, the nuclear fusion fuel source. Dr. Robinson at the Laboratory for Laser Energetics (LLE) is researching materials for tritium handling. One of his current projects is to use atomic layer deposition (ALD) to create specialized coatings for tritium gas piping, holding canisters, and filters. The goal of this project was to develop a new ALD system which could aid Dr. Robinson in his research efforts.

The current ALD reactor system requires multiple runs to create ALD growth rate plots. This process currently takes many days to complete. The team has built a custom reactor that can perform these growths simultaneously. The new system must allow for samples to be removed at different points in the ALD to run without compromising the entire batch by exposing the samples to atmosphere. This change will cut the time to characterize growth linearity down, which will speed up new process development.

DELIVERABLES, REQUIREMENTS, SPECIFICATIONS

The team discussed with the sponsor and project manager and agreed on the following initial deliverables, requirements and specifications:

Deliverables:

For this project, the team aims to construct a glove box and ALD reaction chamber complete with gas flow, heating, and heat sensing capabilities. The completed assembly will be tested for performance and compliance with specifications agreed upon by the team, project sponsor, and project manager. The team will provide a technical report, bill of materials, and user documentation.

Requirements:

The design of the ALD chamber must be capable of performing ALD to allow for ALD growth plots to be mapped in a single ALD growth run. The design of the glovebox must make sure that when placing or removing the new sample mid-ALD run while the system is at operating temperature without exposing samples to atmosphere. All components in contact with ALD precursors must be designed in consideration of chemical, thermal, and vacuum conditions of thermal ALD for aluminum oxide process. Modifications must be compatible with existing hardware (Electrical System, Argon Flow, Precursor Valves, Hot Trap, Pressure Sensor, Exhaust).

Copyright © 2026 by ASME

Specifications:

For ALD reaction, humidity, pressure, and temperature are crucial for attaining accurate results. To achieve a dry environment, the team will use a dewpoint meter mounted on the glovebox to measure the dewpoint which must be lower than -40°C. Furthermore, the dewpoint detection also indicates the contamination of the glovebox system because only outside air can bring moisture into the operating environment. The ALD reaction chamber is at least 4 inches in diameter and 1 inch tall. The chamber must reach a temperature range of 240–260°C with the heater attached to its bottom. The team will use the thermocouple to test the temperature. Finally, the reaction chamber must be sealed to pass the Helium leak check standard set by the LLE. The Helium leak check must be less than 10^{-9} torr*L/s.

DESIGN CONCEPTS

The group has developed multiple designs for the glovebox opening mechanism, as well as the ALD reaction chamber (seen in the Pugh Matrices in Tables A1 and A2). The group developed many options for the design of the glove box. The first involved purchasing a custom glove box to fit in the space envelope of the LLE's current system. This proved to be complex because glove boxes of this size are far from standard, meaning that purchasing one of these custom sizes would incur a cost greater than the entire budget of the project. Instead, the team selected from options that would be manufactured, including but not limited to a door with a latch and a screw top. Although they have the potential to provide the best seal, each of these present issues regarding manufacturability. In the end, the team decided to make the entire box removable from the system. This would allow for the steel plate on the bottom to act as a bulkhead panel, with every feedthrough entering through the bottom. This design prevails as the easiest to manufacture, easiest to use, removes the concern of feedthroughs melting the polycarbonate walls, and allows for the best usability and serviceability of the reactor. The great achievement of this design is separating the manufacturing of the glove box from that of the reactor and bulkhead panel. Allowing users of the reactor to completely remove the glove box allows for the most unhindered access to the reactor, wiring, and feedthroughs.

Because of the specifications regarding the size of the inside of the reactor, concepts focused mostly on the mechanism that allows users to interact with the samples. The first involves a hinged plate that presses into a base to create a seal. This is a design that is seen in preexisting ALD reaction chamber systems, so the team used it as a baseline when considering options. The second option considered was that of a plate connected to a base by a guiding rod that can swivel the top plate out of place. This design provides a simple manufacturing process but may struggle regarding ease of serviceability or usability within the space envelope. The final design the team has considered is that of two metal plates; one that is fixed in place as a base, and another that is set into the base using three guiding fixtures. This design presents itself as a cheap and simple solution to the problem. By using a fine finish of the metal surfaces, and the O-ring that is standard in other designs, the team concluded that the two plates with guiding fixtures is the best solution for the reaction chamber.

MECHANICAL ANALYSIS

The team encountered several design considerations that required a deeper analysis to ensure the integrity of the system under operating conditions. The following sections detail each performed analysis.

Tolerance Analysis – Glovebox Latches

The four latching mechanisms that clamp the box to the stainless steel base plate are crucial to analyze uniformity in clamping pressure on the silicon gasket. If uneven clamping is applied, the glovebox may not have a good seal which could corrupt an experiment. The team was aware of large tolerances in the dimensions of the glovebox and placement of the latches and hooks. To accommodate this tolerance, the team utilized spacing washers to allow independent adjustments for each latch and hook as shown in Appendix A4.1.

Fatigue Analysis – Reactor Lid

The hook for the reactor lid is an area where the team had fatigue related concerns; the team determined that a low-cycle-fatigue analysis was appropriate given the glovebox has ~100 expected lifetime uses. The stress in the hook was computed from NX mass properties analysis of the lid weight and approximated hook geometry. Using a stress life curve for stainless steel 304, these values were used to determine that the fatigue strength of 300 MPa is far greater than the expected hook stress of 389 KPa. There is no concern for fatigue related failure in the hook using the stress life method.

Torque Analysis – Bulkhead Panel to Frame

It is important to consider torque specifications for bolted connections to ensure a secure connection of the bulkhead panel to the frame during use of the glovebox. An under-torqued bolt could mean the glovebox comes loose during an experiment and potentially invalidates the results. The fastener torque calculations performed in Appendix 4.3 relate to the bolts mounting the stainless steel baseplate to the existing aluminum extrusion frame. The team computed that 14.31 ft*lbf is appropriate and will adhere to this specification during the final assembly.

Copyright © 2026 by ASME

Materials Selection – Glovebox walls

The glovebox is constructed of 0.25” clear polycarbonate. This material selection was made based on recommendation from Bill Mildenberger due to its higher durability and manufacturability compared to other affordable clear plastic sheeting like acrylic. Solvent welding was used to quickly create strong joints in the glovebox.

Computer-Based Analysis – Heat Transfer

The reactor was simulated using NX Nastran SOL 153 for steady state heat transfer as specified in Appendix A4.4 to characterize the thermal profile of the reactor chamber. The simulation parameters such as eternal temp and convection coefficient were adjusted following an experimental preheat trial to mirror real world results where a steady state temperature of 113°C was found. Using these new parameters, a transient simulation was created and run to compare experimental and simulated preheat times, which were found to be comparable, 233 min – 220 min, as shown in Appendix A4.5. These results gave the team confidence in the thermal profile generated by the simulation. Future work should be done to widen the portion of the reactor under uniform temperature load to create more usable space in the chamber. This could be done through a secondary wrap around heater, more insulation, or reactor geometry changes.

Mechanical Analysis – O-ring Seal

During design discussions about reactor seal designs, an idea was proposed that the force developed on the lid by the vacuum would be enough to self-seal the chamber. A rough hand calculation estimate was done in Appendix A4.7 to determine the feasibility of this plan. The team calculated that the force generated during operating conditions of 186 psi distributed over the selected Durometer 75, 4.25” diameter, 0.070” square cross section Viton O-ring would translate to an O-ring squeeze percentage of 18-30%. Although the calculation was approximate, it gave the team confidence that the selected O-ring was worth testing. Later, physical leak rate tests demonstrated that the self-sealing capability of the chamber would be sufficient for operation.

Manufacturing

Glovebox Manufacture

The team constructed the glovebox from polycarbonate sheets cut and solvent welded the sheets together. Polycarbonate was selected because it is a transparent material that allows the operator to see the working area clearly. Polycarbonate was also selected for its greater chemical resistance and mechanical durability relative to alternatives such as acrylic. The team cut polycarbonate sheets using a table saw to create walls and cleats with the help of Jim Alkins. Additional precision cuts were made by Bill Mildenberger to improve the fit between pieces. Additionally, a small opening was cut as an entry point for user access. A short section of polycarbonate tubing was solvent welded over the opening to serve as an attachment point for the glove. The panels, cleats, and tube were assembled by Bill using solvent welding, given the hazardous nature of the chemicals involved. RTV silicone sealant was subsequently applied along all the interior corners and edges to ensure the glovebox was gas tight.

A silicone gasket was laser-cut with the aid of Chris Pratt to create gasket material for sealing the box. Small, washer-like gaskets were designed and produced to fit underneath the reactor standoffs and feedthroughs to provide a seal. A large gasket was laser-cut to fit underneath the edges of the glove box. Ideally, the draw latches would pull down the glove box and create a fully sealed surface. In addition to the gasket seals, a simple glove clamp port system was purchased to be mounted onto the extruding tube allowing for easy attachment of the glove.

Draw latches were mounted onto small polycarbonate plates that were solvent welded to the outside of the box to provide sealing force on the gasket. The team chose to solvent weld studs on the outside of the glovebox to reduce potential leak points created by placing fasteners through the walls of the glovebox. Additionally, since draw latches work best when aligned collinearly to their associated hooks, the additional thickness allowed for tunable alignment of the latches to the matching hooks, which were positioned at the edges of the bulkhead panel. These hooks were placed underneath the bulkhead panel to provide a method of tuning the clamping force as illustrated in Appendix 4.1.

Reactor and Bulkhead Panel

The reactor and bulkhead panel were designed with the thermal and chemical requirements of the system in mind. During operation, the reactor is expected to reach a temperature of 250°C, and the ALD gas lines must be kept above 100°C. Because some ALD precursor gases are corrosive, stainless steel was the most suitable material given the process requirements and cost, and it was decided that the reactor and bulkhead panel were constructed from stainless steel 304. Because the team had limited experience with welding, the team designed the system to require as few welded components as possible.

Copyright © 2026 by ASME

Figure 1 – Machining large pocket feature on Prototrak mill.

The reactor consisted of three main components for manufacture: the chamber, the inlet/outlet tubing, and the lid. Machine. To save time, the curved features such as the main circle pocket and O-ring groove of chamber were machined using a Prototrak 3-axis mill. A manual mill was used for all other features including pre-processing the rough stock square and all the hole features. After machining, the team enlisted help from Jeff Leffler who welded stainless steel inlet/outlet tubing to the chamber. The outside features of the lid were done manually, but the vacuum side of the lid was milled on the Prototrak to attain better flatness over its large surface area. Following this milling step, the lid was then lapped until a polished surface was achieved for improved vacuum sealing performance.

The bulkhead panel was also selected to be made from stainless steel because its low thermal conductivity allows the system to keep heat concentrated around the reactor area rather than spreading to components such as the glovebox seals or electrical components. The bulkhead panel consists of many holes for feedthroughs and standoffs all drilled on the Prototrak to speed up the hole drilling process. While the team considered custom feedthroughs initially, it was estimated that making components would add significant manufacturing time for minimal cost savings. These components were readily bought at a low price. The final component of the bulkhead panel, the heater clamping plate, was designed to be simple to make on a manual machine. This part was milled from a piece of aluminum scrap rather than stainless due to its ease of machining and the fact that the part would not encounter the same chemical environment as other parts of the reactor.

Finally, the frame on which the system sits was made with 80-20 aluminum extrusions. The existing ALD system is constructed out of 80-20 extrusions, so that the team was able to use some of the LLE's existing material to create a frame for this new reactor that is compatible with the existing system.

The construction of the glovebox and reaction chamber required $880.61 in raw material costs, excluding shipping, as shown in Table A6. The total estimated machining time for all components is 54 hours (Table A7). Assuming a machine shop rate of $100 per hour, the machining cost is estimated at $5,400. Therefore, the total build cost is $6,280.61.

The total estimated development time is 96.5 hours, as shown in Table A8. In total, the team contributed approximately 150.5 hours, averaging 37.6 hours per team member.

If this ALD reactor and glove box were to be produced at a larger scale, there are several process and design changes that could be made to improve manufacturability. The glove box could instead be cut by a CNC router and then glued together with the aid of guiding fixtures. The tube that initially held the glove and clamp should be replaced with a standard glove port assembly. With proper fixturing, the glovebox solvent welding process could be reduced to a menial task. The reactor could be made from stainless steel tube stock rather than machined from a solid block, which would reduce the cost of both the materials used and the machining time. This tube would require welding on either side for an end cap on the feedthrough side, a flange ring on the other end to be able to retain the O-ring gasket, in addition to the tubing that was welded in our current design. The bulkhead panel could be laser cut, with all required features to be programmed once and cut in a single pass. The extrusions for the 80-20 frame could both be cut to consistent lengths and constructed with the use of guiding fixtures.

TEST PLAN AND RESULTS

To verify the project specifications, the team performed a set of physical tests summarized in Appendix 3. These specifications consisted of dimensional, leak rate, and thermal specifications. The dimensional requirements dictated the minimum size of the reaction chamber interior and were verified with calipers. The leak rate and thermal specifications, on the other hand, required a more involved testing process.

The reactor seal was tested using an Edwards Spectron 600D leak detector. For this test, the reactor was connected to the leak detector and pumped down to high vacuum state, as seen in figure A5.1. Then, a helium nozzle was used to spray small amounts of helium around potential leak points. Where a leak was detected, the corresponding fitting was tightened with a wrench until no more leaks were found. The final reading from the leak detector indicated that the leak rate of the system was 6.2E-10 std cc/sec, or 4.7E-10 torr L/sec which was lower than the specified 1E-9 torr L/sec.

The thermal performance specification was for the internal base of the reaction chamber to be able to reach a minimum temperature of 250°C. In the system design, the team placed a ring-shaped heating element underneath the reactor and heated the chamber. A thermocouple monitored the temperature at the center of the ring. The team could not test the reactor to its theoretical full temperature range because of the lack of a high-

Copyright © 2026 by ASME

temperature O-ring and because the N_2 system was not functional at the time of testing. Due to logistical issues, the team was unable to source the design intended high temperature (rated to 250°C) Viton O-ring and had to instead use a Buna-N O-ring (rated to 120°C). Considering these difficulties, the team opted to measure system temperature at a lower temperature and compare these results to a detailed heat transfer simulation.

For the test, a VARIAC variable voltage AC power supply was used to supply the system with 40V of AC power. Measuring the heater with a multimeter, the team found that the resistance of the heater was 46 Ω. Using Ohm's Law, the resulting heating power was calculated to be 35W.

The simulation was updated to represent the conditions of this test. The heater watt density was assumed to be 6W/in^2, or 1/3rd of nominal given that the heater was powered to 40V rather than the full 120V. Adjusting external temperature to measured values in Taylor Hall, the updated simulation was run and found a similar steady state temp of 111.49°C. Then, a transient simulation with identical parameters was run for further verification and found a theoretical preheat time of 220 minutes, comparable to the experimental time of 233 minutes. These results gave the team confidence in the simulations accuracy, which could then be adjusted to verify the reactors' ability to achieve 250°C with a higher heater wattage. These simulations are shown in Appendix 4.6 and predict that the reactor will meet the thermal performance specification of 250°C minimum.

The physical test shows that the model conditions have some weight, and that with a higher heater input power, the desired temperature of 250°C is attainable.

Modifications to Requirements/Specifications

Time limits on the project ultimately required the team to modify requirements and specifications of the system. These modified requirements include the minimum chamber temperature specification, the software requirement, and the temperature uniformity requirement. The temperature specification could not be met due to the high temperature O-ring not arriving in time for testing. According to the previously mentioned tests, the system theoretically can support the specified temperatures, but this fact is not verifiable until a suitable O-ring is sourced. The software requirement was cut entirely as it was agreed upon with the sponsor that powering the system with a VARIAC would be an acceptable solution. Finally, the temperature uniformity requirement was altered. The requirement initially stated that the internal temperature must be uniform across the chamber but was later agreed to be modified to state that the interior floor of the chamber must be quantified using the thermal camera. Comparing information from the thermal simulations and physical data, the sponsor is provided with enough information to characterize and make future improvements.

Improvements/Future Testing

The thermal performance test of the system could be improved to provide direct temperature measurements of the interior of the reactor. During the test, information about the inside of the chamber was taken indirectly by releasing pressure on the vacuum system and opening the chamber to use a thermal camera to image the floor of the chamber. The thermal camera data revealed that the floor of the chamber was significantly cooler than the thermocouple measurement, so more data should be taken to explain this discrepancy.

Because opening the chamber resulted in large swings in temperature, an additional test was devised. For this test, a thermocouple feedthrough was obtained that would allow measurement of the internal chamber temperature without opening the chamber. According to the simulation, the steady state temperature of the chamber matched the temperature measured by the heater, but the thermal images suggest that there is a significant time delay in the heat up of the chamber interior. This additional test will serve to further confirm conclusions based on the thermal simulation.

At the time of writing, the N_2 system has also not been tested yet. The plan for this test is to use a dewpoint meter plumbed to the glovebox to measure water content inside the glovebox system. If the dewpoint meter reads below the specified -40°C dewpoint temperature, then this specification will be passed.

INTELLECTUAL PROPERTY JASON

The ALD reactor and glovebox system developed in this project is based largely on existing ALD technology, so it is unlikely to be patentable in its current form. Most of the key features—such as vacuum chambers, gas delivery systems, and sealed reaction environments—are already widely used and covered by prior work in both industry and research. The patents that are related to the team's design are shown below:

- US6812157B1 - Prasad Narhar Gadgil - ATOMIC PRECISION SYSTEMS Inc
    - Similar reactor geometry and the gas flow system. The reactor chamber is sealed under low pressure or vacuum environment.
- US7456429B2 - David H. Levy – Eastman Kodak Co
    - Similar components: heating chamber, vacuum sealing with O-ring, and standoffs below the reactor chamber.

SOCIETAL AND ENVIRONMENTAL IMPLICATIONS

Materials produced via atomic layer deposition (ALD) enable breakthroughs across many fields, including but not limited to nuclear power, energy storage, and advanced electronics. Dr. Robinson at the Laboratory for Laser Energetics (LLE) is

Copyright © 2026 by ASME

concerned with the development of tritium permeation barriers. Tritium, a radioactive isotope of hydrogen, is a common fuel for nuclear fusion reactions (alongside deuterium) and provides unique and problematic storage considerations. Because of the small size of each atom, tritium is known to diffuse through materials that are regularly used for storage of similar materials. Depositing layers of alumina (Al_2O_3) reduces the permeation of tritium by orders of magnitude compared to standard materials [1]. It also provides the benefit of uniform films being deposited inside containers with complex geometries. If nuclear energy is fully realized, it would provide the world with limitless clean energy without any long-lasting nuclear waste and no risk of nuclear meltdown. Tritium is the key fuel that makes fusion possible, so the handling of the material is an important consideration when developing nuclear fusion systems.

The reactor itself is mostly benign. The cost of electricity to power the heater is comparable to that of a hot plate, and no dangerous or rare materials were used to manufacture the device. The reactor will be used for ALD growth plots, which brings about some environmental considerations. Gases involved in running the system include Argon and Nitrogen (N_2), which are safe to expel into the atmosphere. However, ALD precursor materials are often chemically intensive, difficult to procure, and can be hazardous. For example, the most well-studied ALD reaction deposits alumina, which involves trimethyl aluminum, a pyrophoric substance, and water in the reaction. In this case, researchers will often filter the exhaust to capture these unsafe chemicals to be disposed of safely.

RECOMMENDATIONS FOR FUTURE WORK

If the team had the time to perform another design iteration, a greater priority would be placed on improving glovebox design, as well as testing thermal performance more thoroughly. At the time of writing, the system's ergonomics have not been tested in a full ALD growth yet, but from preliminary assembly, the system presents opportunities to improve usability. The limited mobility of the operator's arm combined with the small glovebox size make opening and closing the chamber a challenge. With another design pass, it would be possible to experiment with different glove positions and reactor lid shapes to make the process easier. The glovebox N_2 sealing was also not able to be tested properly but proved difficult to seal uniformly during test assembly.

As mentioned previously, there were a number of limitations on thermal testing that would benefit from further design iterations. With time to source a higher temperature O-ring, it would be possible to test the reactor to its full thermal range. Additionally, the simulations and thermal image data revealed that only the center of the chamber receives uniform heating. Further design effort should be directed towards increasing usable space inside the chamber by selecting a different heating configuration or modifying the insulation.

ACKNOWLEDGMENTS

Authors acknowledge the help of Dr. Zachary Robinson, Professor Christopher Muir, Christine Pratt, Samantha Kriegsman, Jim Alkins, Bill Mildenberger, Jeff Leffler, Paul Osborne, and Rashad Ahmadov for their aid in the completion of this project.

REFERENCES

[1] Z. R. Robinson, "Development of an atomic layer deposition system for deposition of alumina as a hydrogen permeation barrier," J. Phys.: Mater., 2026. [Online]. Available: https://iopscience.iop.org/article/10.1088/2515-7639/ae2544

[2] C. Muir. "ME204/ME205 Mechanical Design Lectures", University of Rochester, Rochester, New York, August 2025-April 2026.

[3] R. G. Budynas and K. J. Nisbett, *Shigley's Mechanical Engineering Design*, 11th ed. New York, NY, USA: McGraw-Hill, 2020.

[4] Parker Hannifin Corporation, "Compressive Load Force by Cross Section, 70 & 90 Duro," Parker O-Ring eHandbook. [Online]. Available: https://www.parker.com/content/dam/Parker-com/Literature/O-Ring-Division-Literature/O-Ring-ehandbook-pdfs/compression-load-force-by-cross-section-70-and-90-duro.pdf.

[5] The O-Ring Store LLC, "O-Ring Groove Chart." [Online]. Available: https://www.theoringstore.com/store/index.php?main_page=page&id=39

Copyright © 2026 by ASME

APPENDIX

A1: PUGH MATRIX SELECTION FOR GLOVEBOX AND REACTION CHAMBER

Table A1 – Pugh matrix outlining the selection of the glovebox opening.

	Purchase glovebox (baseline)	Door 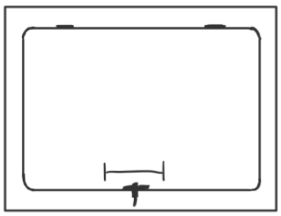	Screw top	Whole box lid 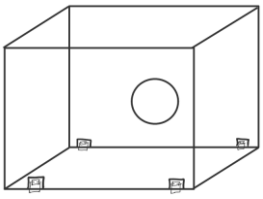
Manufacturability	0	+	-	+
Usability	0	+	0	+
Cost	0	+	0	+
Seal Strength	0	0	+	-
Serviceability	0	+	-	+

Table A2 – Pugh matrix outlining the selection of the Atomic Layer Deposition (ALD) reaction chamber.

	Hinged Design (baseline)	Guide Rod 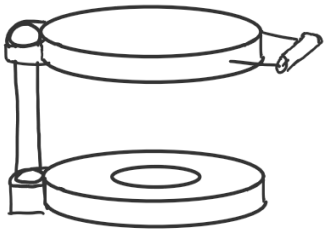	Guiding Fixtures 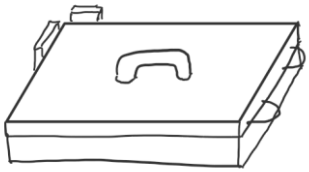
Manufacturability	0	+	0
Usability	0	-	0
Cost	0	0	+
Seal Strength	0	0	0
Serviceability	0	-	+

The team used five criteria to compare each glovebox or ALD reaction chamber component. The team's ability to manufacture, the ease of use for a person running an ALD reaction, the cost that would be incurred in the manufacturing process, the component's ability to seal, and the ability to service the glovebox/ALD reaction chamber by a scientist. It should be noted that the hinged design was considered a baseline, since it is standard in other ALD reaction chambers, but would be manufactured by the team if chosen.

Copyright © 2026 by ASME

A3: REQUIREMENTS AND SPECIFICATIONS TESTING SUMMARY

Table A3 – Summary of specifications and tests performed.

Specification	Value	Test Performed	Measurement	Result
Glovebox maximum dewpoint	-40°C	Connect N_2 gas line and measure dewpoint	To be tested	To be tested
ALD chamber He leak check	1E-9 torr L/sec	Perform LLE He leak check to measure leak rate	4.7E-10 torr L/sec	**PASS**
ALD chamber minimum achievable temperature	240°C	Measure reactor heat-up using thermocouple	**111°C	**FAIL**
ALD chamber minimum internal diameter (circle)	4in	Measure with calipers	4in	**PASS**
ALD chamber minimum internal height	1in	Measure with calipers	1in	**PASS**

*Specification unable to be tested properly due to purchasing issues.

Copyright © 2026 by ASME

A4: MECHANICAL ANALYSIS ONE PAGERS

Figure A4.1 – Tolerance analysis.

Tolerance Analysis – Latches
ALD
04/25/26

Goal and Results
Resolve concerns with latch and hook placement for effective glovebox seal.

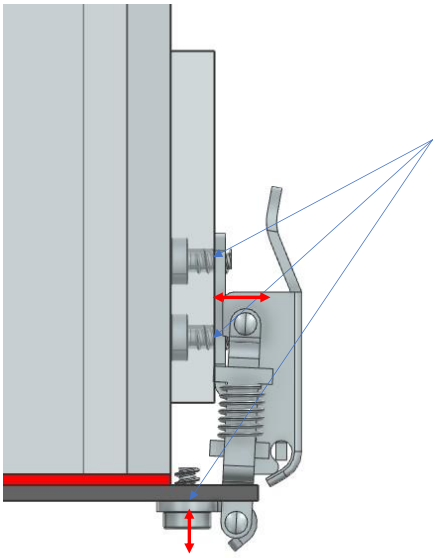

Spacing washers

Spacing washers allow for fine, two-dimensional adjustment of each latch assembly allowing the team to calibrate the 4 latches for uniform clamping pressure on the shown red gasket.

Mechanical Engineering
University of Rochester

Figure A4.2 – Fatigue analysis.

Fatigue Analysis – Lid Hook
ALD
04/25/26

Goal and Results
Determine low-cycle fatigue limit of stainless steel lid hook

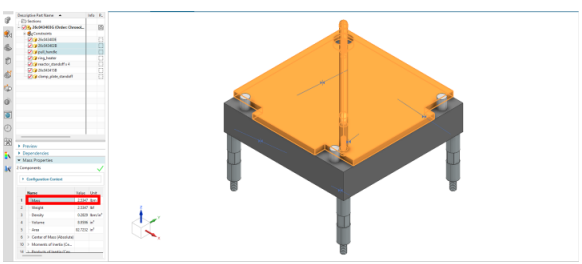

Lid used 3-5 times per experiment, expect ~100 experiments. We expect on the order of 10^3 cycles. This corresponds to a fatigue strength of >300*10^6 Pa.

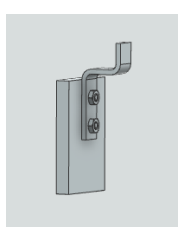

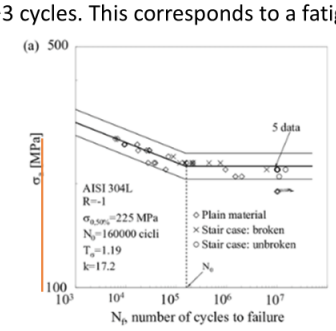

research gate

Stainless steel 310, density = .2829 lbm/in^3
Mass of lid assembly = 2.53 lbm = 1.15 kg

Hook geometry 0.5” x 0.09” = 0.045 in^2 = 2.90*10^-5 m^2
Hook σ = F/A = (1.15 * 9.81)/2.90*10^-5 m^2 = 389*10^3 Pa

Hook stress is well below fatigue strength of stainless steel and failure is not a concern by the stress life method.

Fatigue strength 300 MPa >> 389 Kpa Hook stress

Mechanical Engineering
University of Rochester

Copyright © 2026 by ASME

Figure A4.3 – Fastener torque calculation.

Fastener Torque Calculation – Frame Mount
ALD
04/25/26

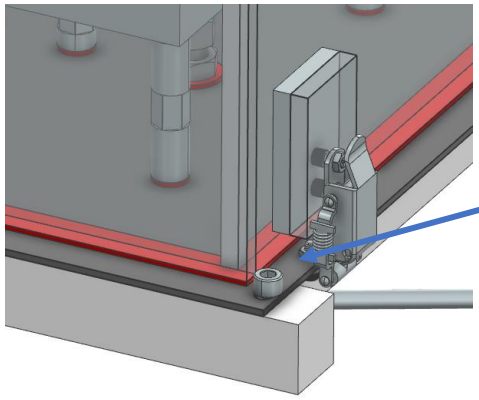

Goal and Results
Compute preload necessary for permanent mount of Stainless steel baseplate to aluminum extrusion frame.

Bolt
Specifications:
d = 0.25 in
Thread density = 20/inch
Proof strength $S_p = 120\ kpsi$
Thread area $A_t = 0.0318 in^2$
Bolt condition – Zinc Plated K = 0.2

$$F_p = A_t S_p = 0.0318 * 120000 = 3816\ lbf$$
$$F_i = 0.9 F_p = 0.9 * 3816 = 3434.4\ lbf$$

$$T = KFid = 0.2 * 3434.4 * 0.25 = 171.72\ in * lbf$$
$$T = 14.31 ft * lbf$$

Mechanical Engineering
University of Rochester

Figure A4.4 – Thermal Simulation.

Computer Analysis – Thermal Simulation
ALD
04/25/26

Goal and Results
Create a thermal simulation which accurately reflects the reactor to characterize the thermal profile of the reactor chamber and verify safe operating temps for the o-ring.

The heat simulation parameters were tweaked to match the experimental trial.
Convection coefficient h = 20 W/m^2K, arbitrary value experimentally verified.
External temp 70F, measured.
Heat flux Q = 6 W/in^2, from McMaster Specifications, 100W total.

O-ring safe operating temp confirmed.

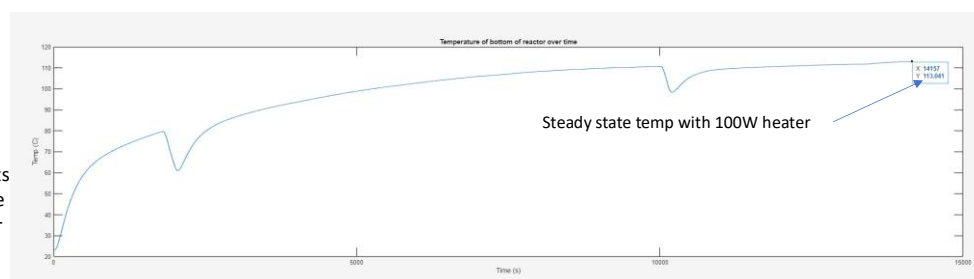

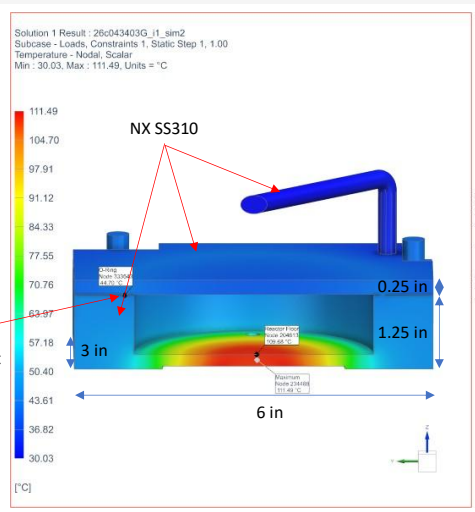

Viton O-ring
4.309" diameter, 0.07" square profile
Thermal conductivity 0.13 Btu/hr/sq. ft/F/Ft

Internal chamber 4" diameter 1" height

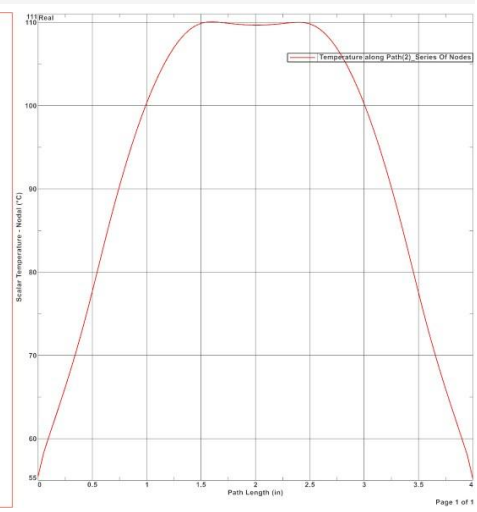

Temperature profile across reactor chamber floor

Mechanical Engineering
University of Rochester

Copyright © 2026 by ASME

Figure A4.5 – Transient thermal simulation.

Computer Analysis – Transient Thermal Simulation
ALD
04/25/26

Goal and Results

Verify heat-up time of tweaked simulation with experimentally determined value of ~14000s – 233 minutes.

All other simulation parameters were identical, a new transient simulation was created to run the same model.

Converged in 220 minutes.

Similar values give confidence in simulation results.

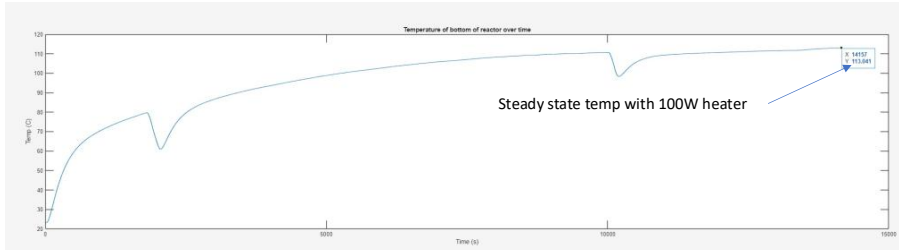

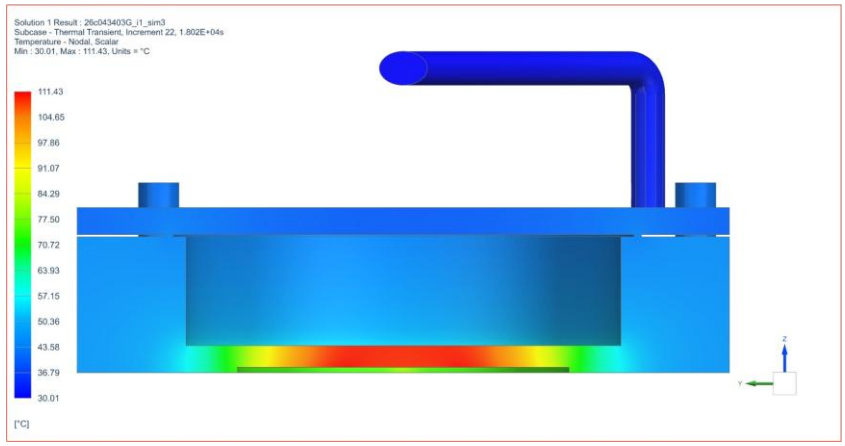

Mechanical Engineering
University of Rochester

Figure A4.7 – O-ring feasibility calculations showing that the initially designed O-ring would self-seal under vacuum.

O-ring Feasibility Hand Calculation
ALD
4/26/26

Goal and Results:

This analysis consists of rough calculations to size O-ring groove and ensure vacuum seal. Based on these calculations, it is feasible that the vacuum seal generates enough pressure to provide proper sealing of the O-ring without additional clamping mechanisms.

Assumptions:

- Atmosphere outside reactor 14.7psi
- Atmosphere inside reactor 1.54E-2psi (800 mtorr)
- Negligible differential thermal expansion
- Polished flat lid and O-ring groove
- Chamber Dimensions=4"x1" Cylinder
- Viton O-ring Properties:
  - Duro 75
  - OD=4.379" ID=4.239"
  - Dash Number 46

O-ring groove size and recommended squeeze %

		Gland	Squeeze		Groove Width		Groove
AS568B	CS	Depth	Inches	%	Liquids	Gases	Radius
-004 to -050	.070	.050 to .054	.013 to .023	19 to 32	.101 to .107	.084 to .089	.005 to .015
-102 to -178	.103	.074 to .080	.020 to .032	20 to 30	.136 to .142	.120 to .125	.005 to .015
-201 to -284	.139	.101 to .107	.028 to .042	20 to 30	.177 to .187	.158 to .164	.010 to .025
-309 to -395	.210	.152 to .162	.043 to .063	21 to 30	.270 to .290	.239 to .244	.020 to .035
-425 to -475	.275	.201 to .211	.058 to .080	21 to 29	.342 to .362	.309 to .314	.020 to .035

https://www.theoringstore.com/store/index.php?main_page=page&id=39
Based on ISO3601-2

Mechanical Engineering
University of Rochester

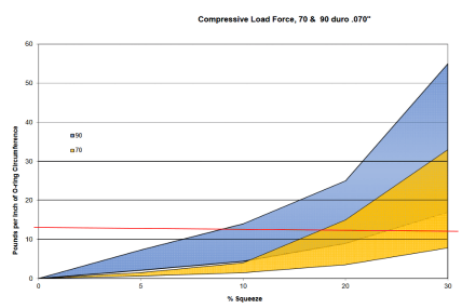

https://www.parker.com/content/dam/Parker-com/Literature/O-Ring-Division-Literature/O-Ring-ehandbook-pdfs/compression-load-force-by-cross-section-70-and-90-duro.pdf
Parker O-ring Resources

13.6lbf/in corresponds to ~18-30% Squeeze percentage

```
%% O-ring Squeeze Calculation
u=symunit;
format short
% Chamber Conditions
D_oring=vpa((4.379+4.239)/2) *u.in % mean diameter of O-ring

D_chamber=4*u.in % Chamber diameter
p_atmosphere=vpa(14.7)*u.lbf/u.in^2 % Atmospheric pressure
p_chamber=vpa(0.0154)*u.lbf/u.in^2 % Vacuum pressure

C_oring=vpa(D_oring*pi,3) % Oring circumference
A_chamber=vpa(pi*D_chamber^2/4,3) % Area
p_net=vpa(p_atmosphere-p_chamber,6)
F=vpa((p_net)*A_chamber,3) % Force generated

F_per_in=vpa(F/C_oring,3) % Force per linear inch
```

p_net = $14.6846 \frac{lbf}{in^2}$

F = $185.0\ lbf$

F_per_in = $13.6 \frac{lbf}{in}$

Copyright © 2026 by ASME

A5: TESTS AND RESULTS

Figure A5.1 – Leak rate measurement using Edwards Spectron 600D showed that the system passed LLE He leak check.

He Leak rate Test
ALD
4/23/26

Goal and Results:
This test verified the reactor vacuum seal meets the agreed upon leak rate specification. After tightening all connections, the system passed with a leak rate lower than the maximum specified.

Leak rate Test Procedure:

1. Plumb reactor to the Edwards Spectron 600D, and seal the other opening with a valve or plug
2. Press the start button to begin pumping down the chamber
3. Open the He regulator
4. Check He is flowing by spraying the nozzle into a small cup of isopropyl alcohol
5. Once the Leak rate tester reaches steady state, spray He around joints or seals
6. If the leak rate goes up, tighten the joint or fitting if possible
7. Repeat until there are no more leak points
8. The reading displayed on the leak rate tester is the final leak rate

Leak Rate Maximum	Leak Rate Measured	Test Result
1E-9 torr L/sec	4.7E-10 torr L/sec	PASS

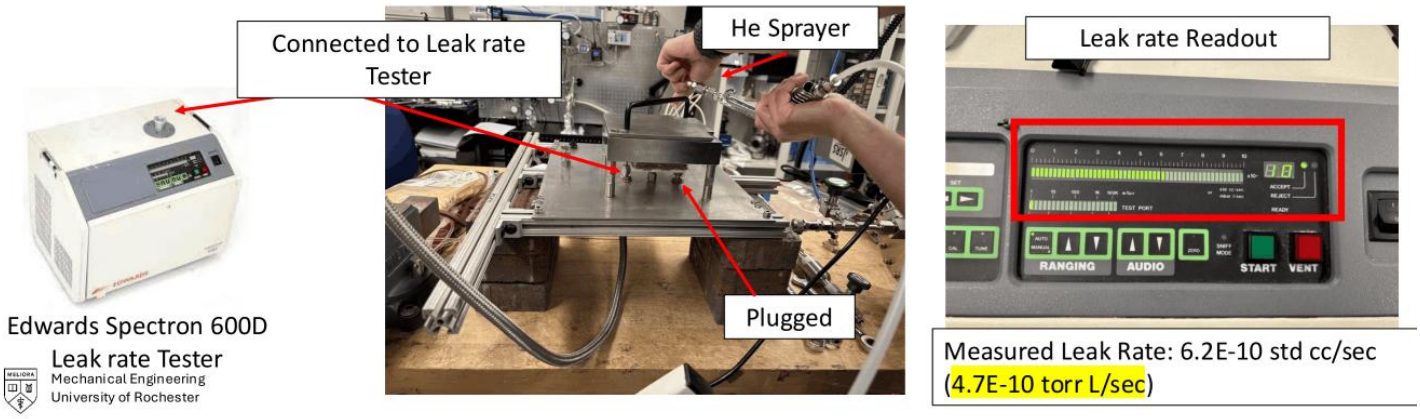

Copyright © 2026 by ASME

A6: BILL OF MATERIALS

Table A6 – Bill of Materials.

item	Part/Item/ASIN	Description (Add Hyperlink if possible)	Quantity	$/Each	Extended
1	1002752780	3 oz. Clear Silicone Adhesive Sealant	2	$ 5.98	$ 11.96
2	8983K951	Stainless Steel for reactor base - 6x6x1-1/4	1	$ 77.52	$ 77.52
3	8983K211	Stainless Steel for eactor Lid - 5x5x1/4	1	$ 16.36	$ 16.36
4	1170N133	Viton O-rings - .07 square, 4-1/4ID, 4-3/8OD	3	$ 7.99	$ 23.97
5	1568A69	Aluminum Handle, 4-9/16" Center-to-Center Width	1	$ 5.77	$ 5.77
6	8574K284	Clear Polycarbonate, 12" x 48" x 1/4" Sheet	1	$ 53.66	$ 53.66
7	6640A11	Adhesive Spacing Beads, 1 oz. Bottle	1	$ 12.22	$ 12.22
8	3893N13	Glove Box Mounting Clamps with Worm Drive, 5" to 6"	1	$ 17.72	$ 17.72
9	8983K157	Stainless Steel Sheet, .090t - 12x18	3	$ 43.57	$ 130.71
10	92620A548	1/4"-20 Thread Size, 1-3/4" Long, Fully Threaded	1	$ 11.78	$ 11.78
11	95505A601	Steel Hex Nut SAE Grade 5, 1/4"-20 Thread Size	1	$ 5.70	$ 5.70
12	1734A12	Draw Latch, Screw on, Steel, 2-3/8" Long x 1-3/8" Wide	10	$ 5.43	$ 54.30
13	5322T99	Glovebox Glove, Latex Rubber, 39 Mil Thick, Size XL	1	$ 141.00	$ 141.00
14	1170N165	Chemical-Resistant Viton® Fluoroelastomer O-Ring, Square-Profile, 3/32 Fractional Width, Dash No. 158	1	$ 9.77	$ 9.77
15	8574K55	Clear Impact-Resistant Polycarbonate 24" x 24" x 1/4" Sheet	1	$ 53.66	$ 53.66
16	8525T42	Gasket Material, High-Temperature Silicone Sheet, 24" Wide x 24" Long x 1/16" Thick	1	$ 63.91	$ 63.91
17	3682K22	Bolt- and Clamp-Mount Ring Disc Heater with Chrome-Plated Steel Sheath, 120V AC, 300W	1	$ 100.50	$ 100.50
18	B07GZFQDNS	GX16 4 Pins Panel Metal Mount Circular Metal Aviation Connector Adapter Male Female Plug Socket (5 Pcs)	1	$ 7.99	$ 7.99
19	31AC5650	Thermocouple Connector, Miniature, Yellow, RMJ Series, Socket, Round, Type K, Socket, Panel	2	$ 6.60	$ 13.20
20	92200A194	Mil. Spec. 18-8 Stainless Steel Socket Head Screw, 8-32 Thread Size, 1/2" Long	1	$ 4.68	$ 4.68
21	92141A008	18-8 Stainless Steel Washer for Number 6 Screw, General Purpose, 0.156" ID, 0.312" OD	1	$ 1.53	$ 1.53
22	47065T101	T-Slotted Framing Single Four Slot Rail, Silver, 1" High x 1" Wide, Solid	1	$ 15.90	$ 15.90
23	3871K493	Thermocouple Probe for Liquids and Gases Type K, Flat-Pin Mini, 3" Long x 1/16" Diameter Probe	1	$ 46.80	$ 46.80

Total Material Cost $

$	880.61

Copyright © 2026 by ASME

A7: TIME IN MANUFACTURING

Table A7 – Time in Manufacturing.

Manufacturing Stage	Tasks	Staff/Member	Time (hr)	Cost ($100/hr)
Reactor				
	Machine Reactor	Tyler Liao	17	$ 1,700.00
	Machine Reactor Lid	Tyler Liao	3	$ 300.00
	Assistance	Bill Mildenberger	1	$ 100.00
	Assistance	Sam Krigsman	1	$ 100.00
	Polish Reactor Lid	Cameron Lowe	3	$ 300.00
	Weld Solid Tube on Reactor	Jeff	1	$ 100.00
Glovebox				
	Cut Polycarbonate	Jason Cao	3	$ 300.00
		Hayden Groeschel	3	$ 300.00
	Assistance	Jim Alkins	1	$ 100.00
	Drill Holes on Polycarbonate	Jason Cao	1	$ 100.00
		Hayden Groeschel	1.5	$ 150.00
		Tyler Liao	1	$ 100.00
	Assistance	Sam Krigsman	1	$ 100.00
	Glue Polycarbonate	Jason Cao	0.5	$ 50.00
		Hayden Groeschel	0.5	$ 50.00
	Assistance	Bill Mildenberger	0.5	$ 50.00
	Seal Glovebox with RTV	Jason Cao	2	$ 200.00
	Glue Latches	Jason Cao	3	$ 300.00
		Hayden Groeschel	3	$ 300.00
	Cut Gasket	Jason Cao	2	$ 200.00
	Assistance	Chris Pratt	2	$ 200.00
Stainless Bottom				
	Drill Holes on stainless steel	Tyler Liao	3	$ 300.00

Total Time Spent (hr)	54
Total Cost ($100/hr)	$ 5,400.00

Copyright © 2026 by ASME

A8: DEVELOPMENT TIME ESTIMATE

Table A8 – Summary of specifications and tests performed.

Tasks	Member	Time Spent (hr)	Cost ($100/hr)
Design Reactor			
	Cameron Lowe	12	$ 1,200.00
	Tyler Liao	12	$ 1,200.00
Design Glovebox			
	Jason Cao	20	$ 2,000.00
	Hayden Groeschel	20	$ 2,000.00
Thermal Simulation			
	Cameron Lowe	8	$ 800.00
	Tyler Liao	5	$ 500.00
Frankenstein Model			
	Jason Cao	8	$ 800.00
	Tyler Liao	1.5	$ 150.00
Determine Latch Position			
	Jason Cao	2	$ 200.00
	Hayden Groeschel	2	$ 200.00
	Tyler Liao	2	$ 200.00
Laser Cut Wood Bottom Plate			
	Tyler Liao	3	$ 300.00
	Jason Cao	1	$ 100.00

Total Time (hr)	96.5
Total Cost $	$ 9,650.00

Copyright © 2026 by ASME

PEER REVIEW LOG

Tyler reviews Hayden's draft to create r1
Hayden reviews Tyler's draft to create r1
Tyler reviews his r1 to create v1
Hayden reviews his r1 to create v1
Tyler reviews Jason's draft to create r1
Jason reviews Tyler's v1 to create r2
Jason reviews Hayden's v1 to create r2
Jason reviews his r1 to create v1
Hayden reviews Jason's v1 to create r2
Hayden reviews his r2 to create v2
Tyler reviews his r2 to create v2
Jason reviews his r2 to create v2

ADDITIONAL FILES

TeamALDComponentCircuitDiagrams.pptx - **To be done**

TeamALDTheoryOfOperation.docx -**To be done**

TeamALDDrawingPackage.pdf - **Done**

TeamALDBOM.xlsx - **Done**

Copyright © 2026 by ASME